AUTOCAD GENERATED DRAWING,DON'T CHANGE BY HAND

Kinghelm®

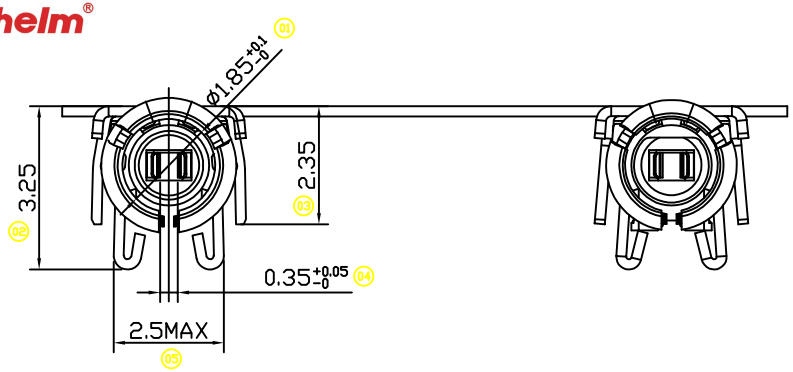

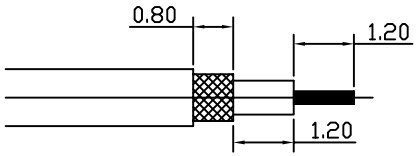

Applicable cable nominal dimension

字符:37

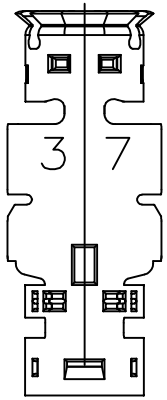

Mark Position

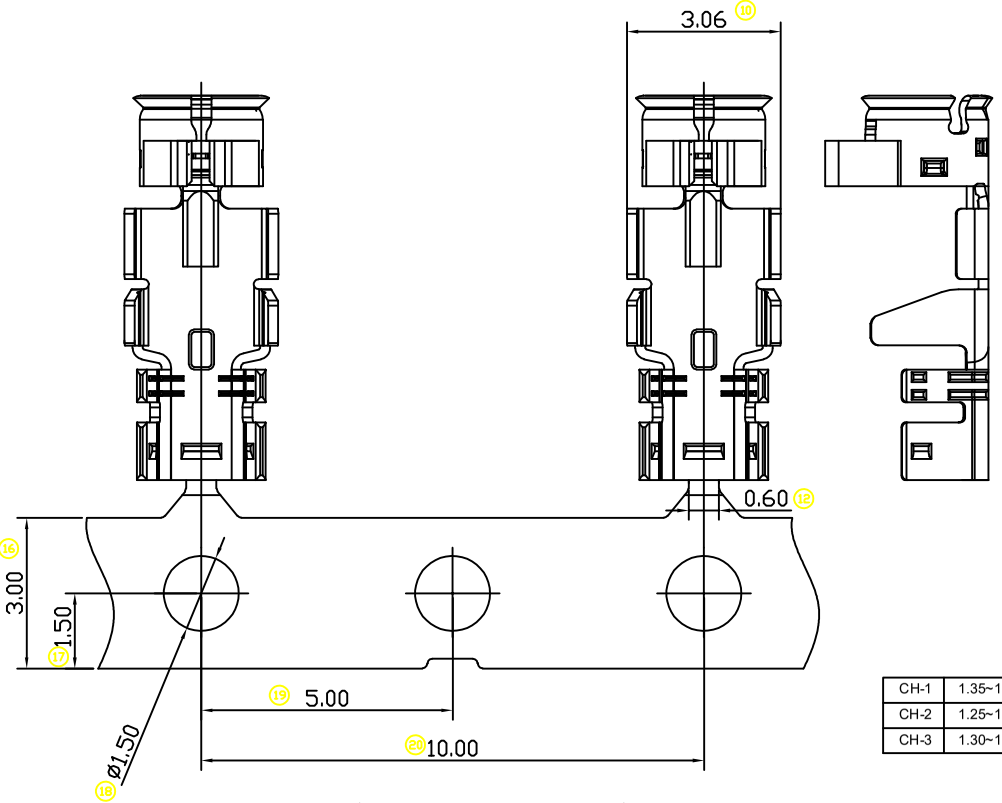

CH-1	1.35~1.50
CH-2	1.25~1.35
CH-3	1.30~1.50

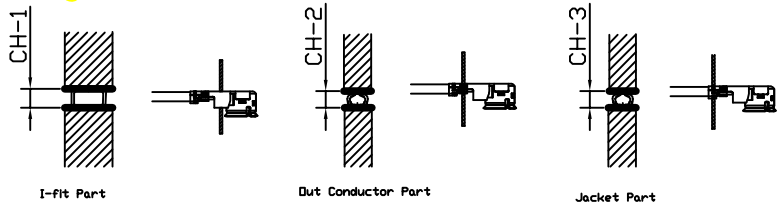

- NOTES -

1. MATERIAL:
   1-1.HOUSING: THERMOPLASTIC, UL 94V-0;
   1-2.TERMINAL: C5210 T=0.1,GOLD FLASH PLATING;
   1-3.SHELL CARRY: C5210 T=0.2, GOLD FLASH PLATING.
2. ELECTRICAL PERFORMANCES:
   2-1.CONTACT RESISTANCE: 20 mOHMS MAX.;
   2-3.INSULATION RESISTANCE: 500 MOHMS MIN.;
   2-4.WITHSTANDING VOLTAGE: 200 V AC FOR 1 MINUTE MIN.;
3. MECHANICAL PERFORMANCES:
   3-1.DURABILITY:30 CYCLES;
   3-2 UNMATING FORCE:
   INITIAL:7N
   AFTER 30 CYCLES:5N

ITEM	DESCRIPTION	Q'TY	MATERIAL	FINISH	REMARK
3	HOUSING	1	Thermoplastic UL94V-0	Glass:30%	
2	TERMINAL	1	Copper Alloy	Ni:50" ~90" Gold Flash	
1	SHELL	1	Copper Alloy	Ni:50" ~90" Gold Flash	

REV.	ECN NO.	DESCRIPTION	DATE

UNITS: mm
DATE: DATE
SCALE: 1:1
SHEET: 1
REV. REV

GENERAL TOLERANCE

X. ±0.20	X.° ±1.00°
.X ±0.15	.X° ±0.50°
.XX ±0.08	.XX° ±0.30°
.XXX±0.05	.XXX°±0.10°

MATERIAL: MATERIAL
Q'TY 1
FINISH: FINISH

DRAW:
CHECKED: CHECKED
APPROVE: APPROVE

PART NO.: KH-IPEX-1.37
TITLE: TITLE:
DRAWING NO.: DRAWING_NO.:

深圳市金航标电子有限公司