Kinghelm®

REV.	ECN NO.	DATE
A	N/A	2025/10/09

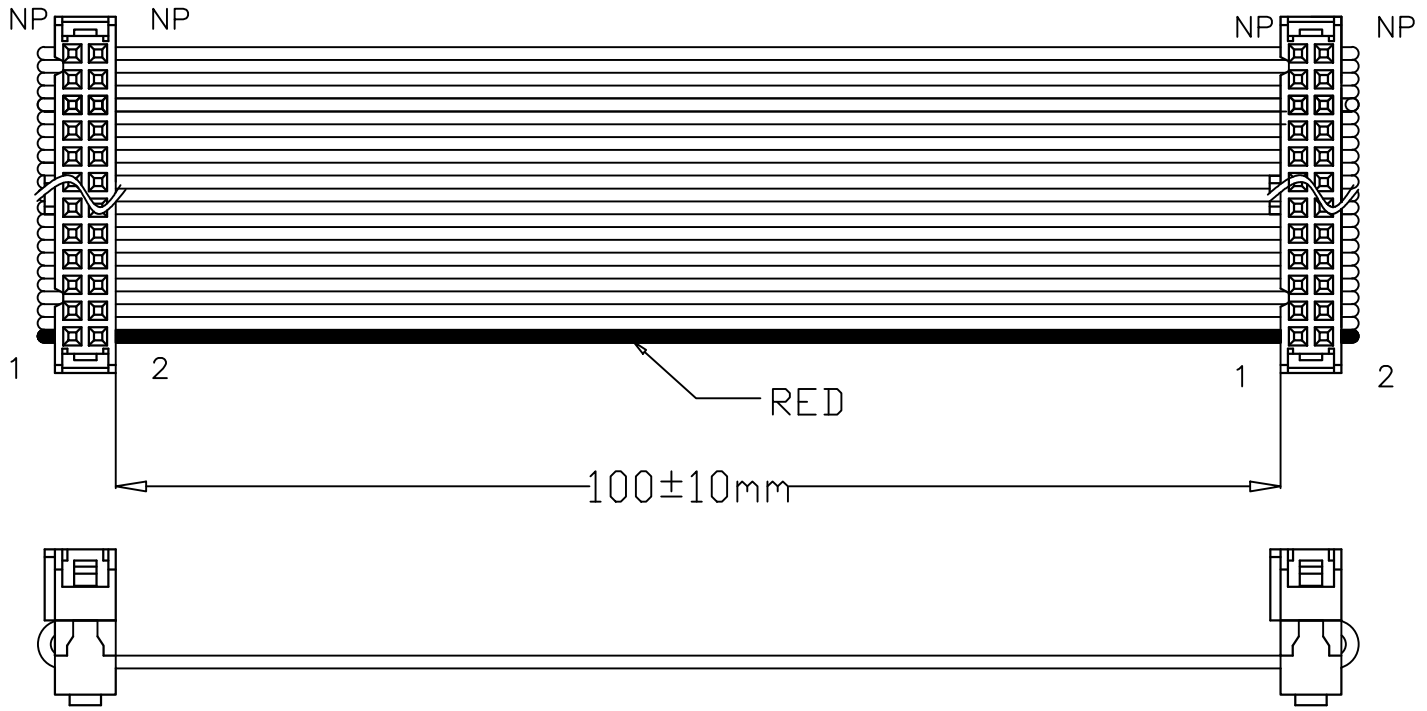

REMARKS :

1. 100% OPEN/SHORT TEST.
2. TEST VOLTS/INSULATION RESISTANCE : DC 7V/500KΩ.
3. INSPECTION DIMENSION: DIM L.

ITEM	DESCRIPTION	Q'TY	REMARK
2	FC-xxH(3)	2	PBT+G/F BLACK
1	FLC-xxP UL2651 PH=1.27mm	1	28AWG GRAY L=132mm 7*0.127

	SIGNATURE	DATE	TITLE: FC-xxH(3) CABLE		CODE NO.	---	TOLERANCE:	深圳市金航标电子有限公司 Shenzhen Kinghelm Electronics Co., Ltd.
DRN.	GRP	2025/10/09			CUS. NO.	---	x.	
CHK.			Q&T P/N:	CUS. P/N:	SCALE	---	.x	KH-2.54FC-2X10P-100MM
APP.					UNIT	mm	.xx	0755-28190160
					PAGE	1/1	ANG.	