Rev.	ECN Number	Description	Date	Drawn	Checkd	Approved

Kinghelm®

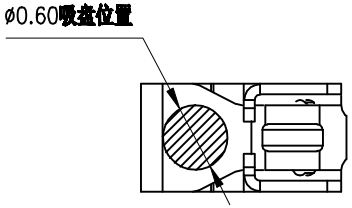

技术要求:

1.材质:不锈钢SUS301,T=0.10±0.005;

2.端子锡脚焊接面和接触面不可有毛边,其他部位毛边最大0.03mm;

3.扭曲:45°/1000mm,拱形 5mm/1000mm;

4.标示有"▼"符号的为重点控制和检验尺寸;

5.未标注之R MAX R0.13;

6.电镀须满足24小时盐雾测试;

7.寿命测试>1500次,产品弹力要求在60gf~80gf之间

8.镍底50~80u"min,焊接区域镀金,接触区域镀金1U"MIN

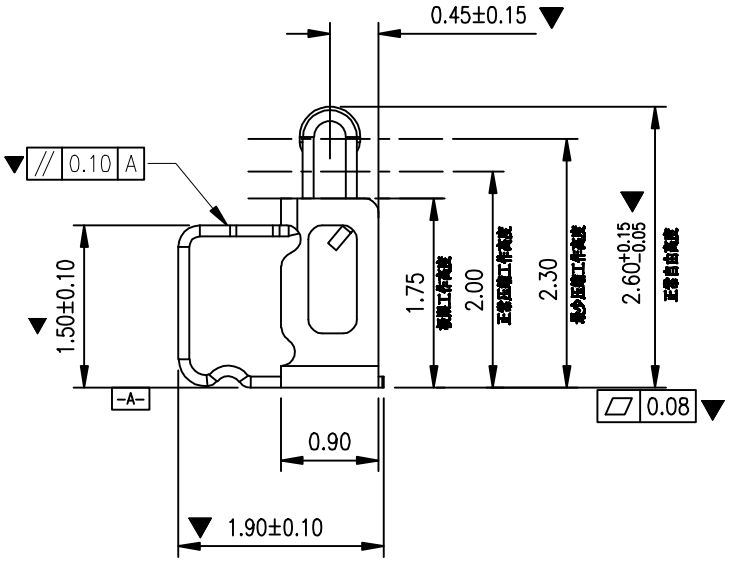

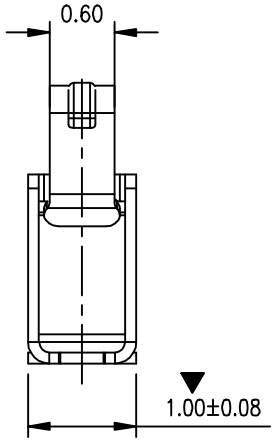

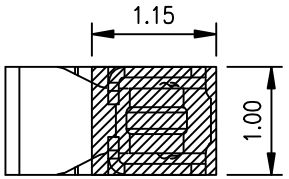

焊盘尺寸

尺寸公差 ±0.05

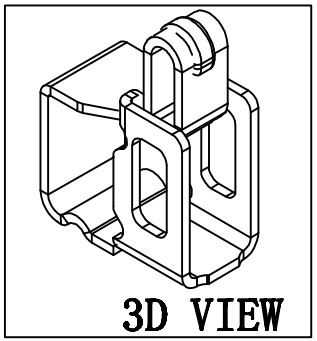

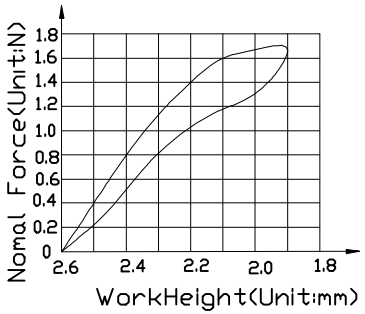

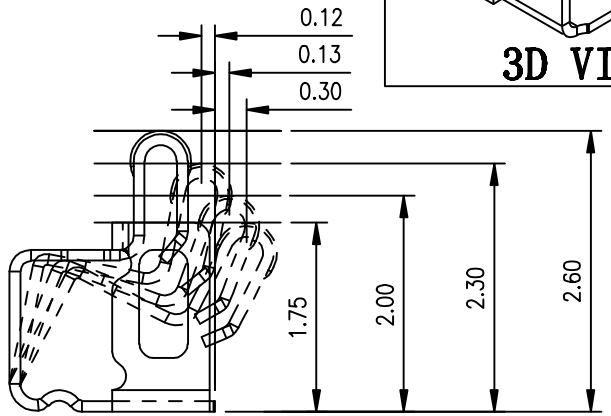

state at working height

深圳市金航标电子有限公司	GENERALTOLERANCE	SCALE: 1:1	DRAWN	DATE	TITLE 客户图	REV. A
www.kinghelm.com.cn	XX. ±0.50	UNIT: mm	CHECK	DATE	RF Antenna Spring,SMT, L1.90*W1.0*H2.60mm	SHEET 1/1
型号：KH-191026-TP	X. ±0.35 X.° ±2.0°		APPROVE	DATE	PARTS NO.(INTENDED USE)	
0755-28190160	.X ±0.25 .X° ±1.0°	SIZE: A4				
	.XX ±0.15 .XX° ±0.5°					